Nordstrong
Equipment Limited

SCREW CONVEYORS

RIGID CONSTRUCTION, DEPENDABLE, SUPERIOR PERFORMANCE

NORDSTRONG offers the most comprehensive line of screw conveyors available anywhere. We have a background of over 100 years experience in the principles, practices and challenges of handling a wide variety of materials by screw conveyors. They have been used throughout the world for moving product in numerous industries and under an extensive range of operating conditions.

Archimedes principle was simple, however in today's market its application can be a challenge. Please use the information provided as a guide only as many alternatives are available. For assistance in determining the correct equipment for your needs, please contact a qualified Nordstrong representative.

SCREW FEEDER

Design

NORDSTRONG screw conveyors are designed and classified according to Conveying Equipment Manufacturers Association (C.E.M.A.) standards for each individual application.

QUALITY WORKMANSHIP

Nordstrong
Equipment Limited

CUSTOM DESIGNS

Conveyor Screws

- Helicoid or sectional flights
- Short, variable and long pitch
- Cut or cut and folded
- Mixing paddles and paddle conveyors
- Tapered diameter or cone design
- Single or multiple ribbon
- Double helix

Trough

Troughs are available in several designs. Gauge of steel used in construction varies depending on size of conveyor and application.

- Jig welded with heavy flanges
- Formed or angle flanged 'U' trough
- Solid or split tubular construction
- Flared designs

PADDLE CONVEYOR
STAINLESS CONSTRUCTION

Covers

Covers are also available in several designs.

- Weather tight gasketed construction
- Flat or flanged with butt strap
- Hip roof available
- Hinged designs
- Bolted or clamp type fasteners
- Quick release clamps

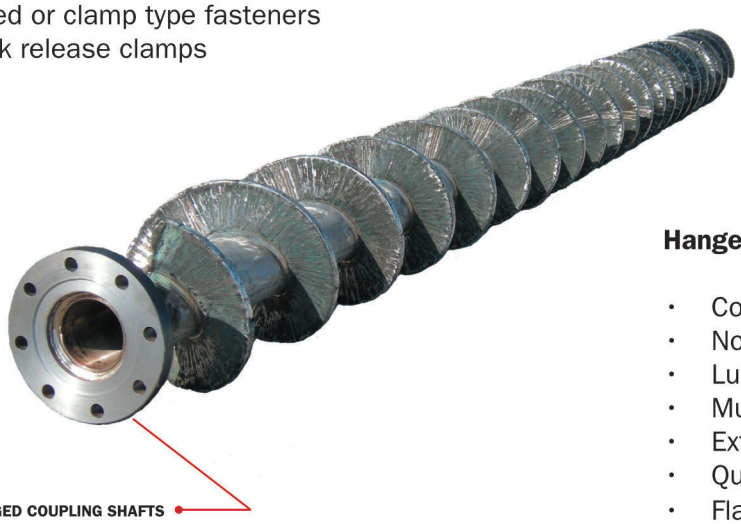

Hangers and Shafts

- Conventional or expansion types
- Non ferrous or hardened materials
- Lubrication tubes and ball bearing options
- Multiple hole shaft drilling
- External sleeves
- Quick release ends
- Flanged coupling shafts

Inlets and Discharges

- Standard or custom inlets
- Optional feeder (shroud) designs
- Stub or flush end discharges
- Hanger end and special outlets available

Gates

- Flat slide or curved gates
- Drop bottom gates
- Dust tight designs
- All available with a selection of operators: manual, electric gearmotor, electric (linear) actuator, hydraulic or pneumatic

Bearings and Seals

- Flange or pillow block
- Ball, roller and heavy duty thrust bearings
- Packing and plate seal housings
- Packed and split gland seals
- High temperature bearings and seals available

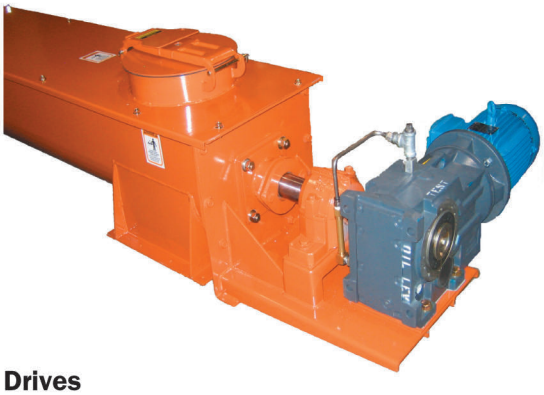

Drives

Standard or customer specified drives available for all sizes.

- Screw conveyor or shaft mount with belt drive
- Gearmotor with chain and sprockets
- Direct coupled combinations

Optional Features

Special Models

- Inclined
- Reversing
- Mixing and blending
- Wear shoes
- Custom designs

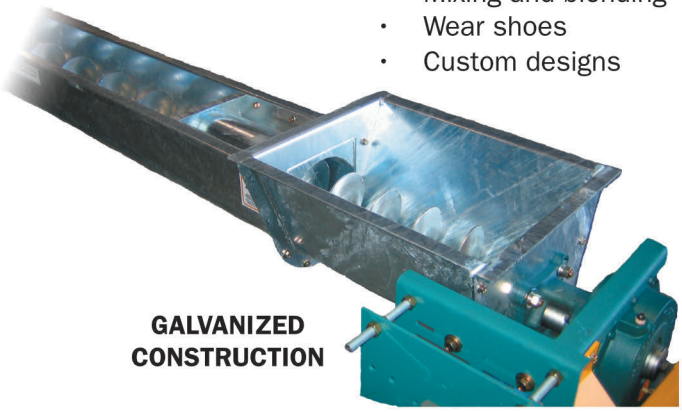

GALVANIZED CONSTRUCTION

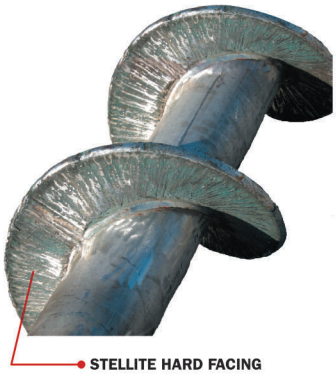

Construction Options

- AR Plate construction
- Hard facing
- Stainless steel
- Feed, food and sanitary finishes
- Galvanized
- Epoxy paints

Safety

- Plug switches
- Overflow relief doors
- Underspeed detection
- Pressure relief vents

SANITARY FINISH

TYPICAL CONVEYOR LAYOUT

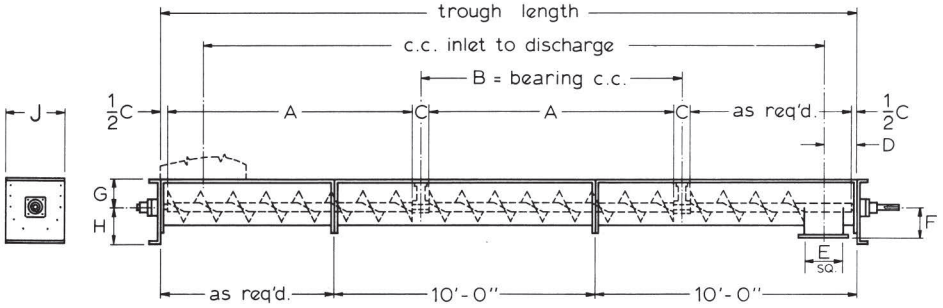

DIMENSIONS											CAPACITY TABLE - HORIZONTAL SCREW CONVEYORS								
											CAPACITY - CUBIC FEET PER HOUR (FULL PITCH)								
											* 95% TROUGH LOAD		45% TROUGH LOAD		30% TROUGH LOAD		MAX RPM	MAX LUMP SIZE	
Screw Diameter	Shaft Dia.	A	B	C	D	E	F	G	H	J	ONE RPM	MAX RPM	ONE RPM	MAX RPM	ONE RPM	MAX RPM		10%	95%
4	1	7-10 1/2	8-0	1 1/2	4 1/2	5	3 3/4	3 5/8	4 5/8	7 3/4	1.31	242	0.62	114	0.41	75	185	3/4	3/8
6	1 1/2	9-10	10-0	2	6	7	5	4 1/2	5 5/8	9 3/4	4.71	775	2.23	368	1.49	245	165	1 1/4	1/2
9	1 1/2 2	9-10 9-10	10-0	2	8	10	7 1/8	6 1/8	7 7/8	13 3/4	17.3	2,680	8.20	1,270	5.45	845	155	2 1/4	3/4
12	2 2 7/16 3	11-10 11-9 11-9	12-0	2 3 3	10 1/2	13	8 7/8	7 3/4	9 5/8	17 1/4	40.95	5,940	19.40	2,820	12.90	1,870	145	2 3/4	1
14	2 7/16 3	11-9 11-9	12-0	3	11 1/2	15	10 1/8	9 1/4	10 7/8	19 1/4	65.85	9,215	31.20	4,370	20.80	2,915	140	3	1 1/4
16	3	11-9	12-0	3	13 1/2	17	11 1/8	10 5/8	12	21 1/4	98.60	12,820	46 70	6,060	31.20	4,056	130	3 3/4	1 1/2
18	3 3 7/16	11-9 11-8	12-0	3 4	14 1/2	19	12 3/8	12 1/8	13 3/8	24 1/4	142.70	17,125	67.60	8,120	45.00	5,400	120	4 1/4	1 3/4
20	3 3 7/16	11-9 11-8	12-0	3 4	15 1/2	21	13 3/8	13 1/2	15	26 1/4	197.80	21,760	93.70	10,300	62.80	6,910	110	4 3/4	2
24	3 7/16	11-8	12-0	4	17 1/2	25	15 3/8	16 1/2	18 1/8	30 1/4	346.00	31,150	164.00	14,760	109.00	9,810	90	6	2 1/2
30	3 7/16	11-8	12-0	4	21 1/2	31	18 5/8	19 1/2	21	36 1/2	682.00	47,750	323.00	29,070	216.00	12,960	70	8	3
36	3 7/16	11-8	12-0	4	24 1/2	37	21 5/8	22 1/2	24	43 1/2	1185.00	65,175	565.00	31,075	375.00	20,625	55	10	4

STANDARD CONVEYOR PITCH CAPACITY FACTOR	CF
Standard Pitch = Diameter	1.0
Short Pitch = 2/3 Diameter	0.67
Half Pitch= 1/2 Diameter	0.50
Long Pitch = 1 1/2 Diameter	1 5

- Capacity = Capacity @ full pitch X CF.

- Capacity based on dry free flowing material.

*- Screw feeders (95%) should not exceed 50% Max RPM.

- General specifications and dimensions are intended to provide sales assistance and a preliminary guide to layout only.